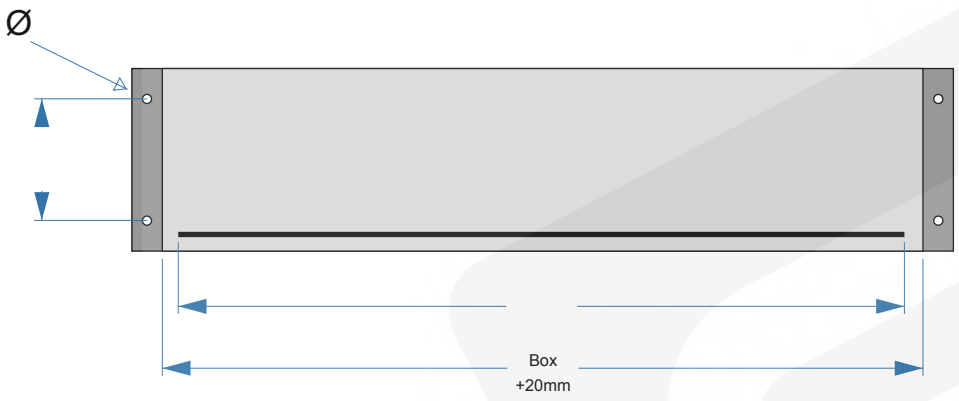

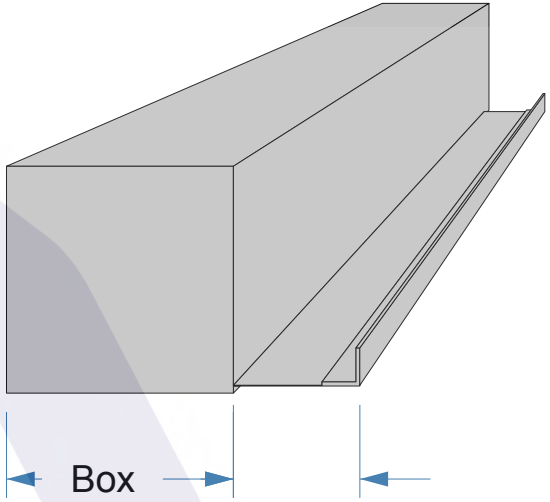

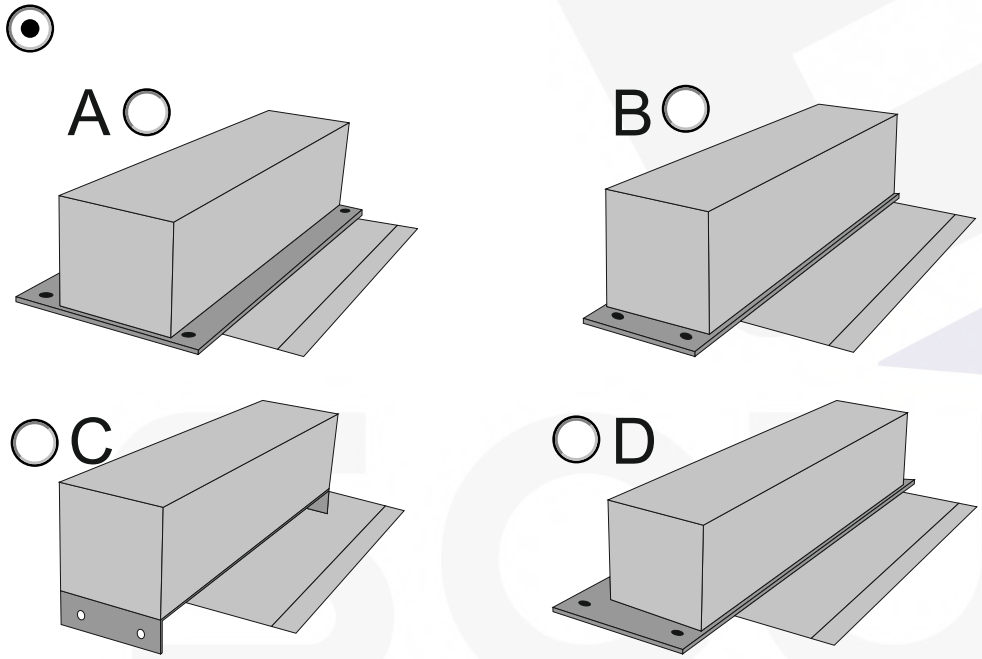
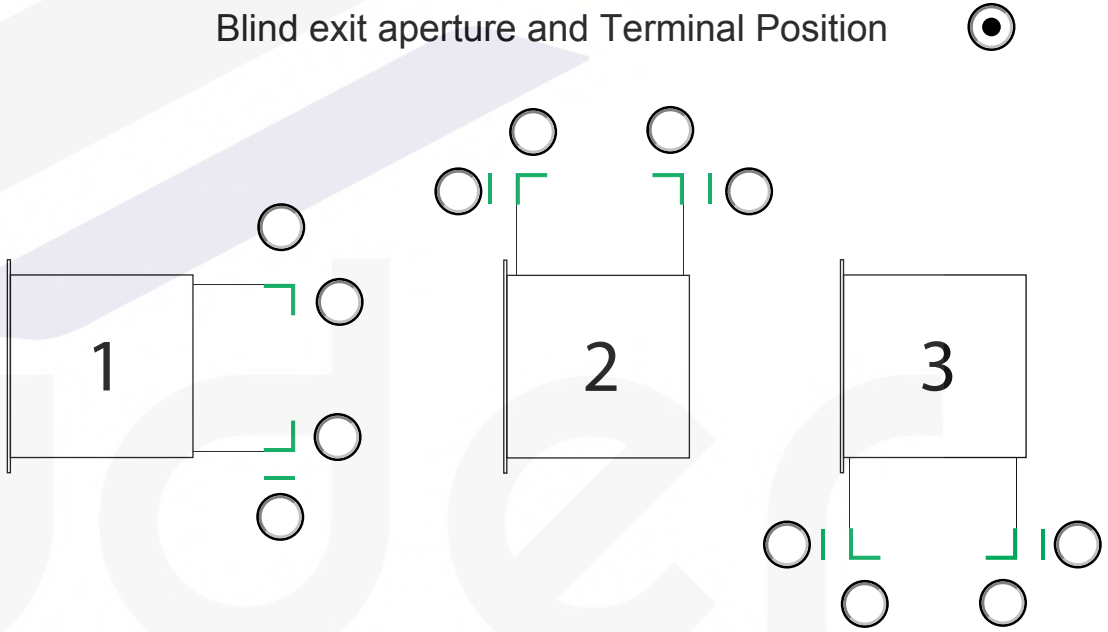
Blind exit aperture and Terminal Position